Hock 3117

WORLD WINE BOTTLES & PACKAGING SOLUTIONS

Experience the difference

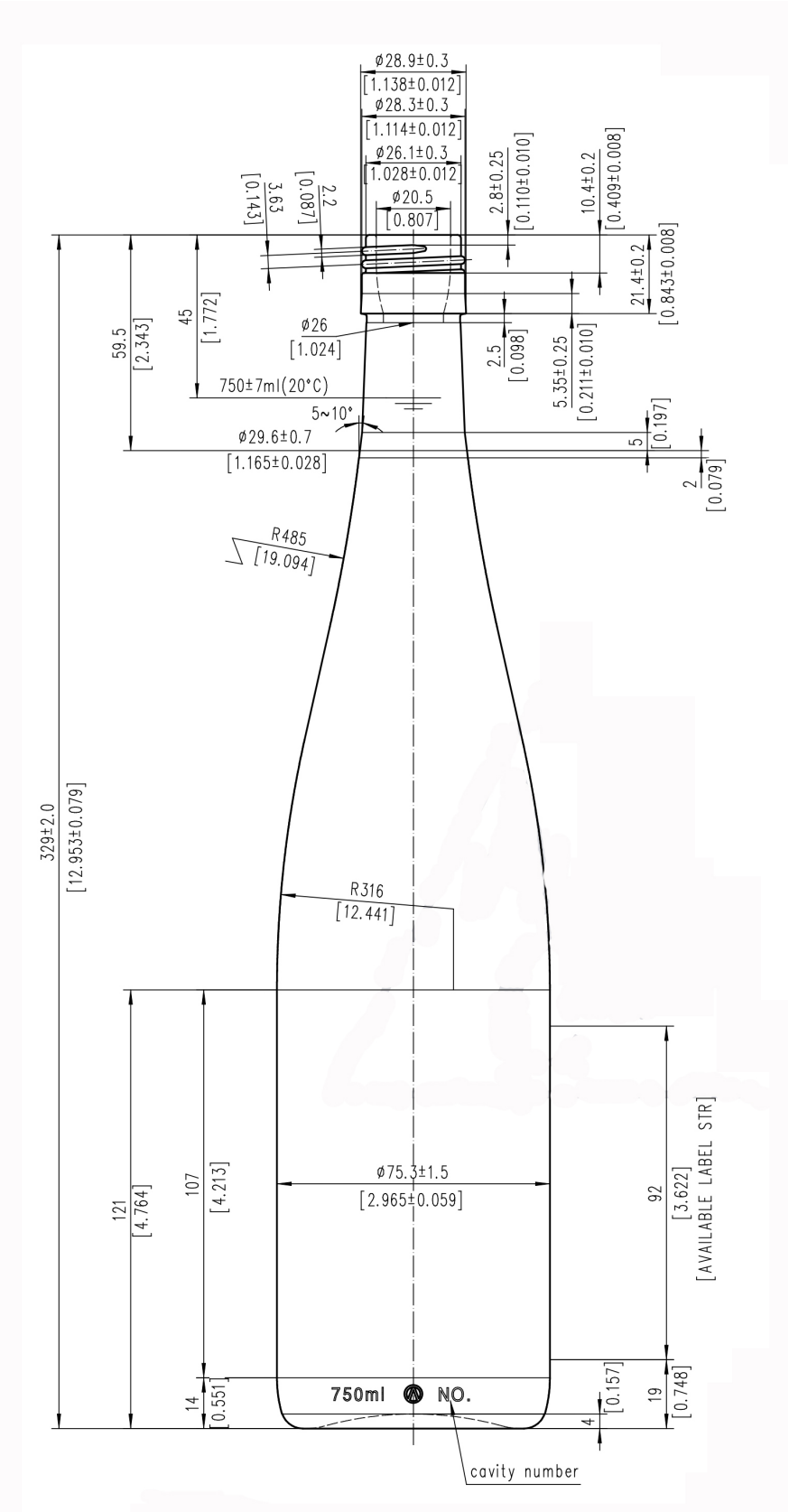

Size: 750ml

Weight (g): 470

Finish: BVS